S.U.N. Engineering, Inc.
10031 E 52nd St
Tulsa, OK 74146-5714

Multi-Diameter Super Pig

6” - 36”

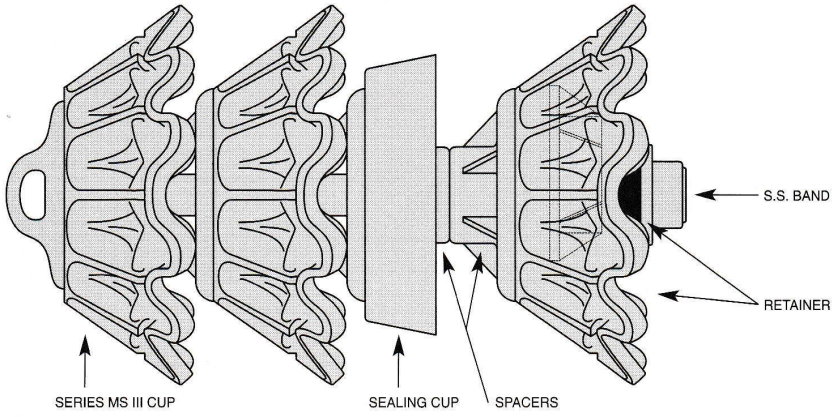

SERIES III

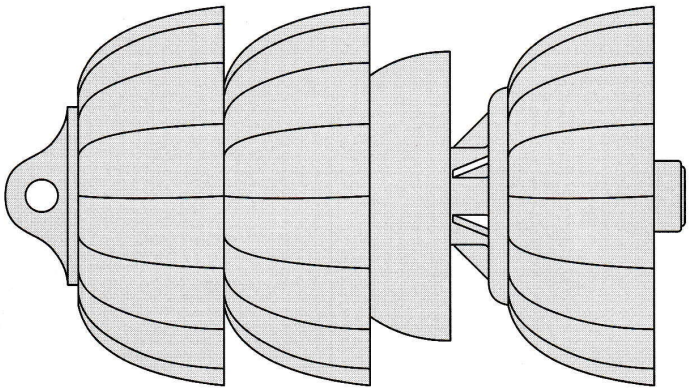

SERIES IV

Description

Series III
Series MS III Cup Sealing Cup Spacers
Series IV

Series III & IV Multi-Diameter Super Pigs are recommended for all pipeline maintenance. These cups are truly multi-diameter and accept changes of more than one line size. These designs have performed well in Pipe ID changes of up to 42%. As with all S.U.N. Engineering, Inc. components, several durometer hardness’s are available to fit specific job requirements.

Options

- Sizes 6” - 36”
- Transmitter/Magnet Compatible
- Several Durometer Hardnesses